Magnetic Catches with Sensors / Ball Catches

Wire Connection Type RoHS10

No.	Part Name	M Material	S Surface Treatment
①	Main Body	Polycarbonate	-
②	Catch Plate	SPCC	Nickel Plating
③	Back Plate		

MGSR

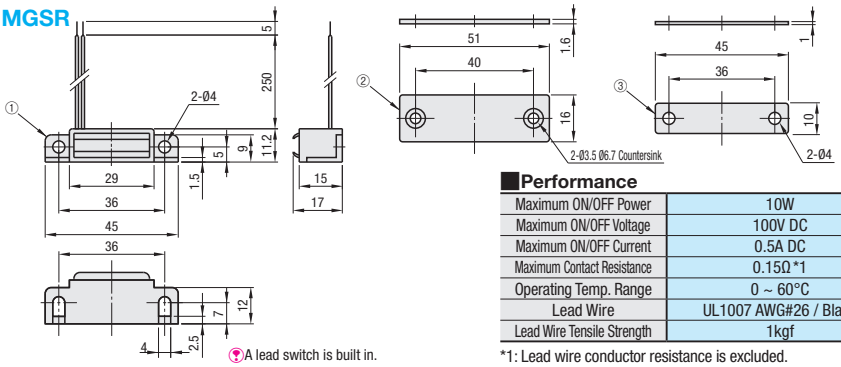

A lead switch is built in.

Performance

Maximum ON/OFF Power	10W
Maximum ON/OFF Voltage	100V DC
Maximum ON/OFF Current	0.5A DC
Maximum Contact Resistance	0.15Ω *1
Operating Temp. Range	0 ~ 60°C
Lead Wire	UL1007 AWG#26 / Black
Lead Wire Tensile Strength	1kgf

*1: Lead wire conductor resistance is excluded.

Part Number Type	No.	Operation	Retention Force (kgf)	Mass (g)	Unit Price 1 ~ 4 pc (s).	Volume Discount Rate 5~200
MGSR	1	OFF when attracted	3	28		
	2	ON when attracted				

For orders larger than indicated quantity, please check with WOS.

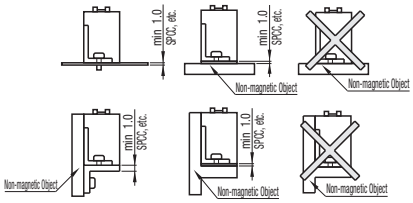

Ordering Example | Part Number: MGSR2

Caution

- Do not apply any strong impacts since a lead switch is used.
- Do not use or store in places with strong magnetic fields.
- Carefully keep magnetic materials (particles) and adhesive objects and etc. away from the attraction surface of the product. To mount it on a nonmagnetic object (wood, plastic, glass, aluminum, etc.), mount the included back plate or a similar magnetic object on the mounting surface.

Magnetic Catches with Switch RoHS10

MGSTK

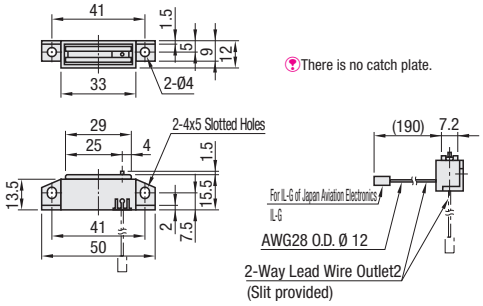

There is no catch plate.

Performance

Circuit Type	1 Circuit, 1 Contact, Normally Closed
Rating	30VDC 10mA (Resistive Load)
Maximum ON/OFF Voltage	500VAC/min.
Maximum Contact Resistance	100MΩ or More (500VDC)
Operating Temp. Range	-10°C ~ +70°C
Lead Wire	For IL-G of Japan Aviation Electronics
Lead Wire Tensile Strength	1kgf

Part Name	M Material	S Surface Treatment
Main Body	Polypropylene	-
Magnet	Ferrite	-

Part Number Type	Retention Force (kgf)	Case Color	Mass (g)	Unit Price 1 ~ 9 pc (s).	Volume Discount Rate 10~49	50~200
MGSTK	3	Black	13			

For orders larger than indicated quantity, please check with WOS.

Ordering Example | Part Number: MGSTK

Ball Catches RoHS10

BCAS (Stainless Steel)
BCASS (Stainless Steel)
BCASD (Zinc Die Cast)

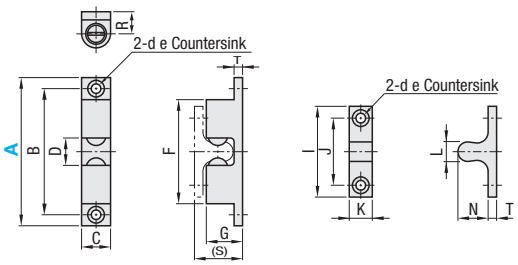

Type	M Material	S Surface Treatment
BCAS	SUS316	-
BCASS	SUS304	-
BCASD	Zinc Die Cast	Chrome Plating

Part Number Type	A	B	C	D	d	e	F	G	T	I	J	K	N	L	R	(S)	Latching Force N (kgf)	Unlatching Force N (kgf)	Mass (g)	Unit Price BCAS	BCASS	BCASD
BCAS BCASS BCASD	32	25	8	4	3.2	6.2	18	9	2	18	11	8	6.5	3.2	6	11.5	17 (1.7)	8 (0.8)	12			
	43	35	8	5.9	3.2	6.2	28.4	10	2.5	25	16	7.5	8.5	4.5	6	13.5	20 (2)	13 (1.3)	16			
	50	40	10	7.5	4.2	8.2	31.5	12.2	2.9	30	20	9	10.3	6	7.7	15.9	23 (2.3)	18 (1.8)	28			
	70	60	13	13			51	17	4	42	30	10.5	15	10	10.5	23	56 (5.7)	38 (3.9)	78			

Ordering Example | Part Number: BCAS50