Toggle Clamps

Side Push (Flange Base) / Smooth Stroke (Flange Base)

Features: MC07-14, MC07-15 and MC07-16 can be used for welding and machining fixtures.

1N=0.101972kgf

Side Push (Flange Base)

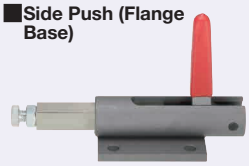

(Clamped)

* Shaft: Nickel Plating

Part Number	MC07-14
Material	Main Body / Attaching Portion: S45C
Surface Treatment	* Chemical Conversion Coating
Stroke (mm)	43
Tightening Force (N)	3000
Weight (g)	1600
Handle Open-Close Angle	110°
Accessory	Steel Bolt
Unit Price	

Side Push (Flange Base)

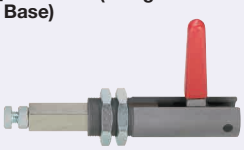

(Clamped)

* Shaft: Nickel Plating

Part Number	MC07-15
Material	Main Body / Attaching Portion: S45C
Surface Treatment	* Chemical Conversion Coating
Stroke (mm)	43
Tightening Force (N)	3000
Weight (g)	1280
Handle Open-Close Angle	110°
Accessory	Steel Bolt
Unit Price	

MC07-14

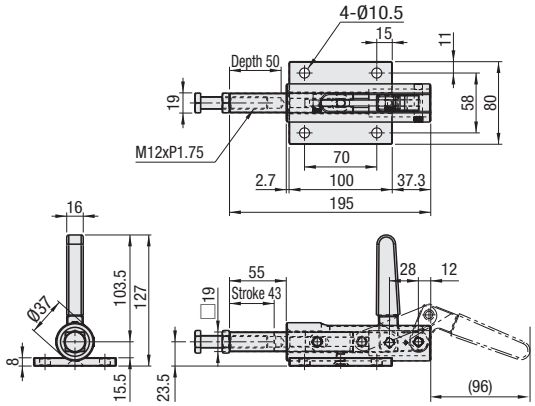

MC07-15

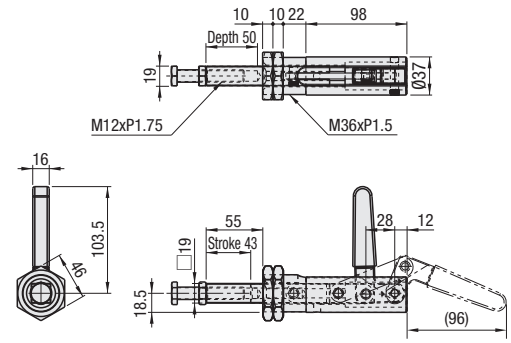

Side Push (Flange Base)

(Clamped)

* Shaft: Nickel Plating

Part Number	MC07-16
Material	Main Body: SS400 / Attaching Portion: FCD450
Surface Treatment	Main Body: * Trivalent Chromate / Attaching Portion: Chemical Conversion Coating
Stroke (mm)	76
Tightening Force (N)	16000
Weight (g)	4360
Handle Open-Close Angle	173°
Accessory	Steel Bolt, Tube
Unit Price	

Smooth Stroke (Flange Base)

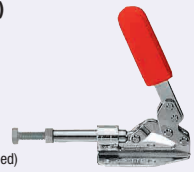

(Clamped)

* Shaft: Nickel Plating

Part Number	MC08-1
Body Material	SS400
Surface Treatment	* Trivalent Chromate
Oil Free Bushing	MDZB12-20: 1 pc.
Stroke (mm)	30
Tightening Force (N)	1960
Handle Open-Close Angle	147°
Weight (g)	380
Accessory	Steel Bolt
Unit Price	

MC07-16

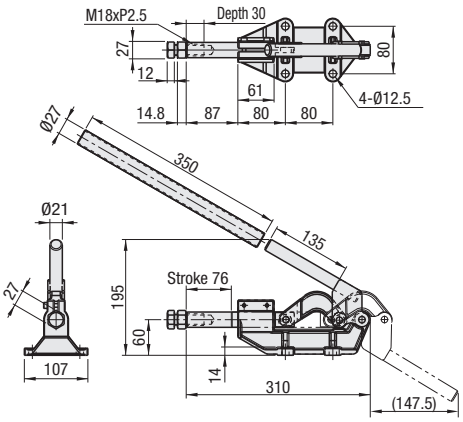

MC08-1

Built-in Oil Free Bushing requires no lubrication.

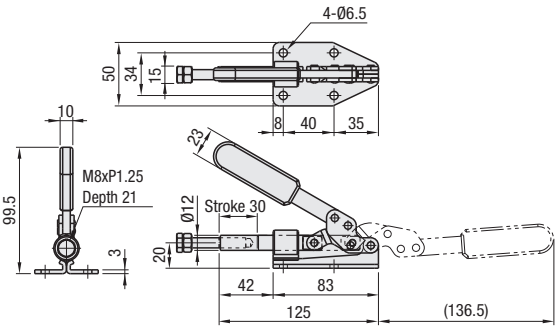

Ordering Example

Part Number
MC07-14
MC08-1
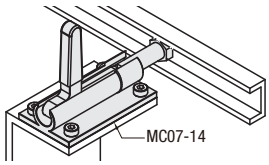
Example