Conveyor Legs (Mounting Brackets)

■Conveyor Support Stands

RoHS10

CGF

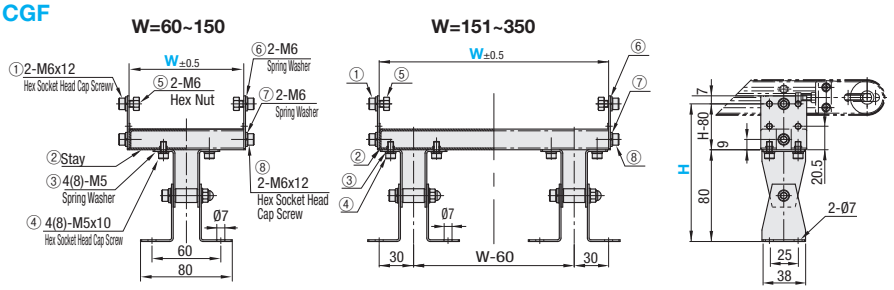

When W=151 ~ 350, the number in ( ) applies to the Hex Socket Set Screws ③ and ④.

Material: SUS304

W=Frame Width (See main conveyor pages)

Part Number	W 1mm Increment	H 1mm Increment	Unit Price
CGF	60~350	120~160	

Ordering Example

Part Number	-	W	-	H
CGF	-	220	-	120

■Conveyor L Type Mounting Brackets

RoHS10

LGBR (Standard Type)

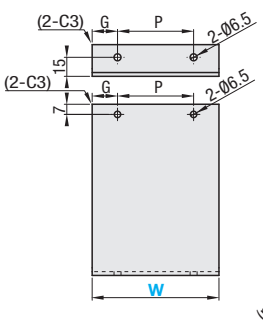

LGBW (Slotted Hole Type)

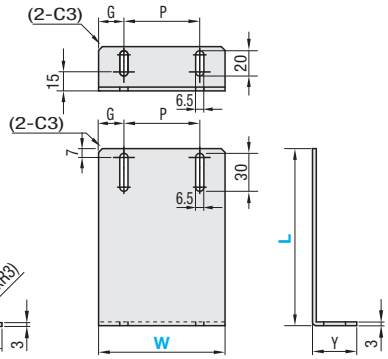

Material: SUS304

Part Number		L Selection	P	G	Y	Unit Price
Type	W					
Standard Type LGBR	30	140	20	5	25	
		200				
	60	140	40	10		
		200				
	100	140	60	20		
		200				

Ordering Example

Part Number		-	L
Type	W		
LGBR	60	-	200

Part Number		L Selection	P	G	Y	Unit Price
Type	W					
Slotted Hole Type LGBW	30	140	20	5	35	
		200				
	60	140	40	10		
		200				
	100	140	60	20		
		200				
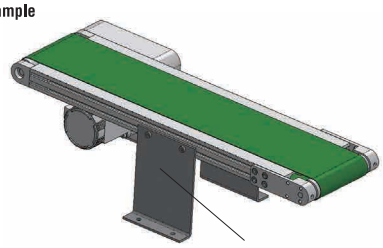
Example