JAT-C • JAT-D • JAT-E

LARGE ANGLE PLATE FOR MC (T-slot Type 18・22・24)

▶ Feature

- For large machines such as MC machines, jig borers.
- Material : FC300
- Heat treatment : Annealing
- Finish : Machine finish

▶ Accessories

- Eye bolt (M16) 2 pcs for lifting

JAT8040C・10050C

- T-slots (18)

JAT8040D・10050D

- T-slots (22)

JAT8040E・10050E

- T-slots (24)

(the product on the photo is a special order product)

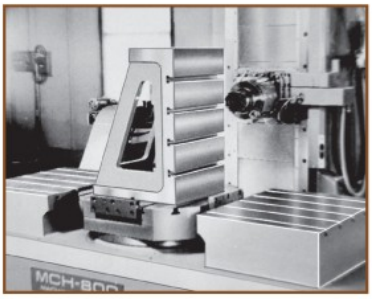

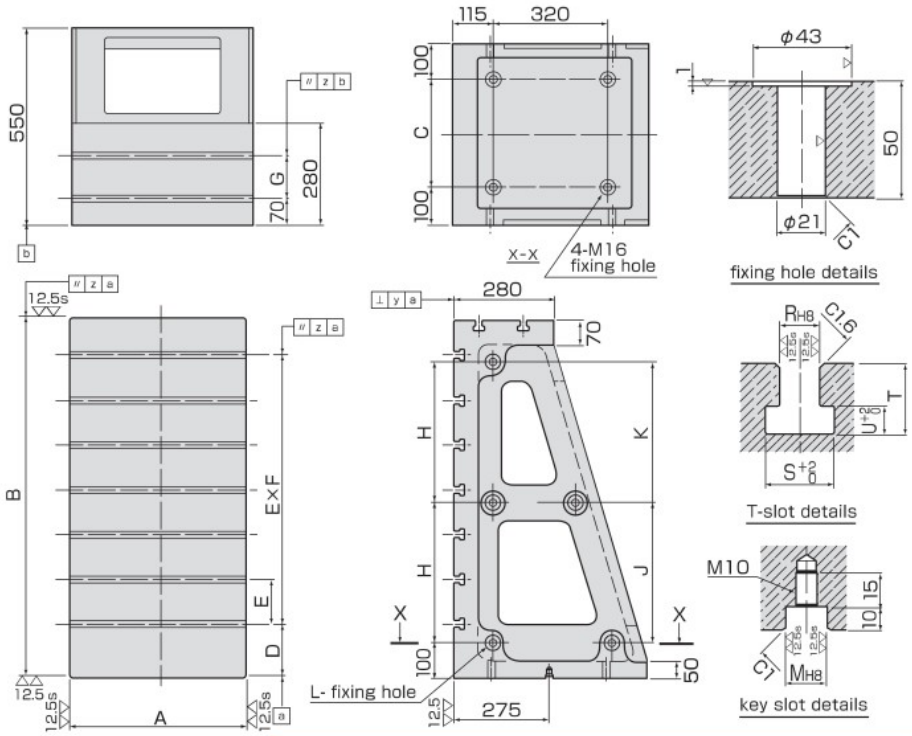

Upon request, we can provide a product of your required specifications.

Item No.	Size (mm)																			N.W. (kg)
	A	B	C	D	E	F	Number of T-slots	G	H	J	K	L	M	R	S	T	U	y	z	
JAT8040C	400	800	200	125±0.05	125±0.03	5	8	125±0.03	—	470	110	8	18	18	30	30	12	0.05	0.03	337
JAT8040D	400	800	200	125±0.05	150±0.03	4	7	150±0.03	—	470	110	8	22	22	37	38	16	0.05	0.03	365.1
JAT8040E	400	800	200	125±0.05	150±0.03	4	7	150±0.03	—	470	110	8	24	24	42	42	18	0.05	0.03	344.8
JAT10050C	500	1,000	300	150±0.05	125±0.03	6	9	125±0.03	390	390	390	10	18	18	30	30	12	0.05	0.03	481
JAT10050D	500	1,000	300	150±0.05	150±0.03	5	8	150±0.03	390	390	390	10	22	22	37	38	16	0.05	0.03	437.2
JAT10050E	500	1,000	300	150±0.05	150±0.03	5	8	150±0.03	390	390	390	10	24	24	42	42	18	0.05	0.03	439.6

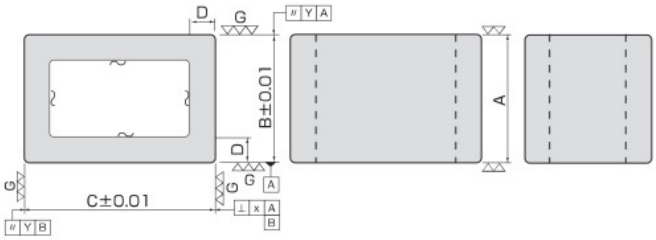

SB-S

SETTING BLOCK FOR MC (Standard Type)

SB100S～200S

▶ Feature

- Widely used block for built-in jigs, parallel bases, measurements and scribe markings.
- Material : FC300
- Heat treatment : Annealing
- Finish : Grinding finish

Upon request, we can provide a product of your required specifications.

Item No.	Size (mm)						N.W. (kg)
	A	B	C	D	X	Y	
SB100S	100	100	150	20	0.01	0.01	7
SB125S	125	125	200	25	0.015	0.01	14.5
SB150S	150	150	250	30	0.02	0.01	26
SB200S	200	150	300	30	0.02	0.01	37.5