Dimensions 1

Unit: mm

φ60

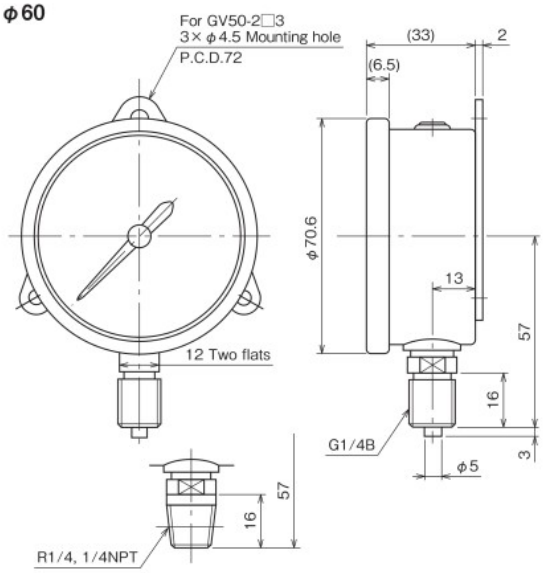

GV50-□□3

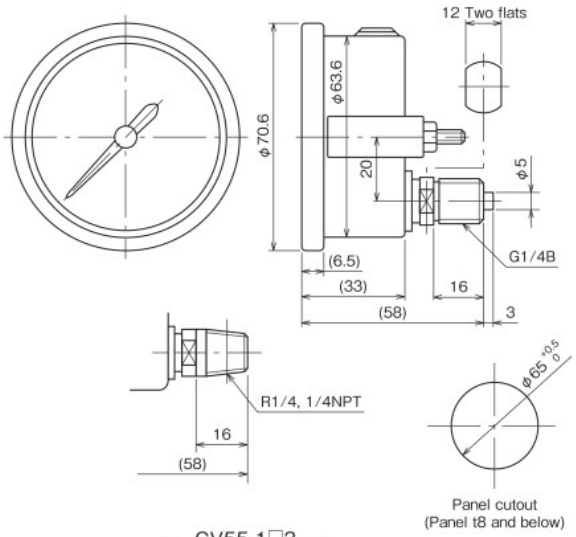

GV55-1□3

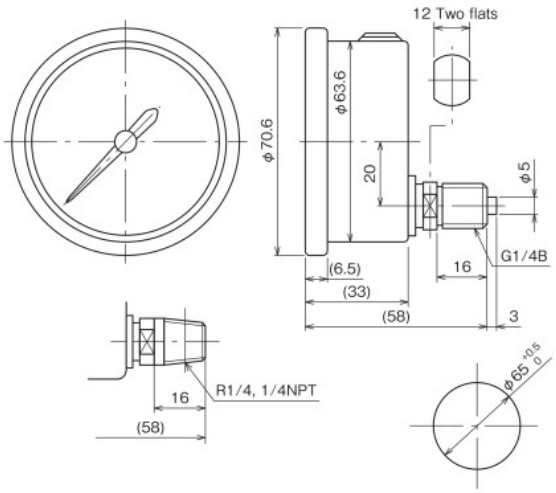

GV55-6□3

Panel cutout

φ75

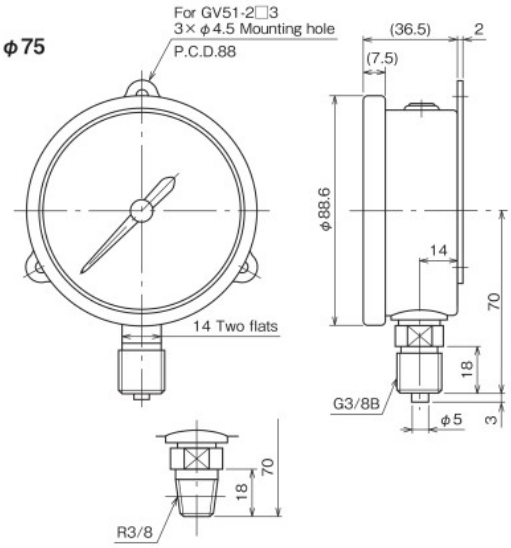

GV51-□□3

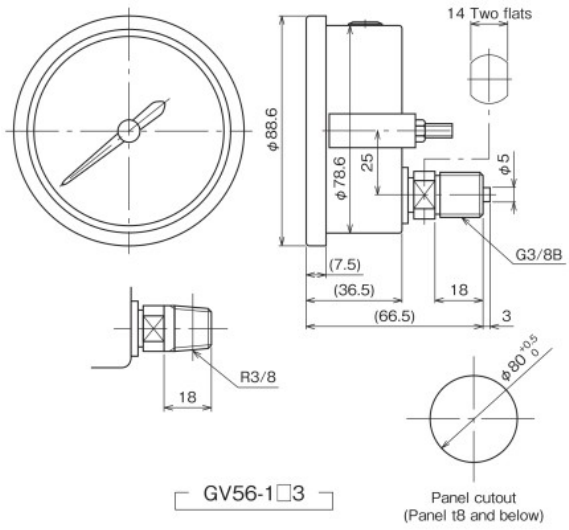

GV56-1□3