SDP-10 DIGITAL POSITION INDICATORS

SDP-10H
(Style H)

SDP-10V
(Style V)

SDP-10F
(Style F)

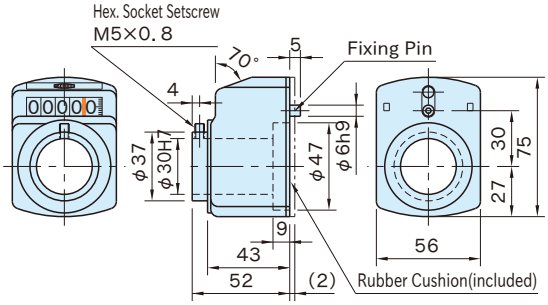

Note : The flat-end fixing pin can not work to mark a fixing point.

Housing
Polyamide(nylon 6)plastic Orange Black(on request)

Features

- Using a shaft sleeve allows accepting a shaft of 12mm, 14mm, 15mm, 16mm, 18mm, 20mm, 22mm or 25mm diameter.
- Lightweight
- Displayed figure height : 7mm

Furnished With

Rubber cushion

How To Use

1 Stick the rubber cushion to the back of the indicator.
2 Drill a fixing-pin hole in the mounting wall, 30mm above the shaft center.
3 Slide the indicator onto the shaft to the mounting wall and then tighten the setscrew.

Application Example

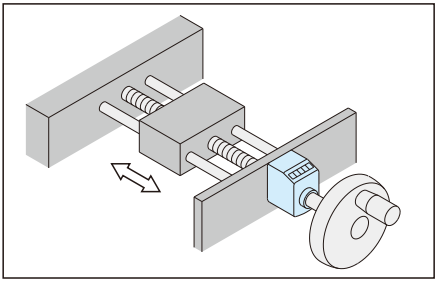

Notes

- Ensure that the start-up revolution speed is 1/3 or lessof the allowable revolution speed.
- Do not give rapid acceleration or sudden stop.
- These position indicators can not be used in applications where the shaft moves in the axial direction.

Technical Information

Working temperature : Up to 80˚C
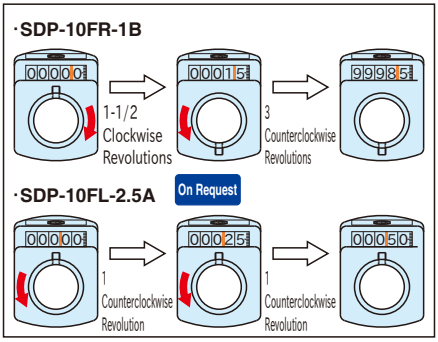
Display Example