ARN ARNESS CLAMPS

Housing	Piston	Lever	Knob
Steel (STPT370) Baked finish Silver-gray	Steel (STPG370) Black oxide finish	Steel (S45C) Black oxide finish	Phenolic plastic Red

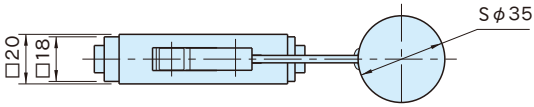

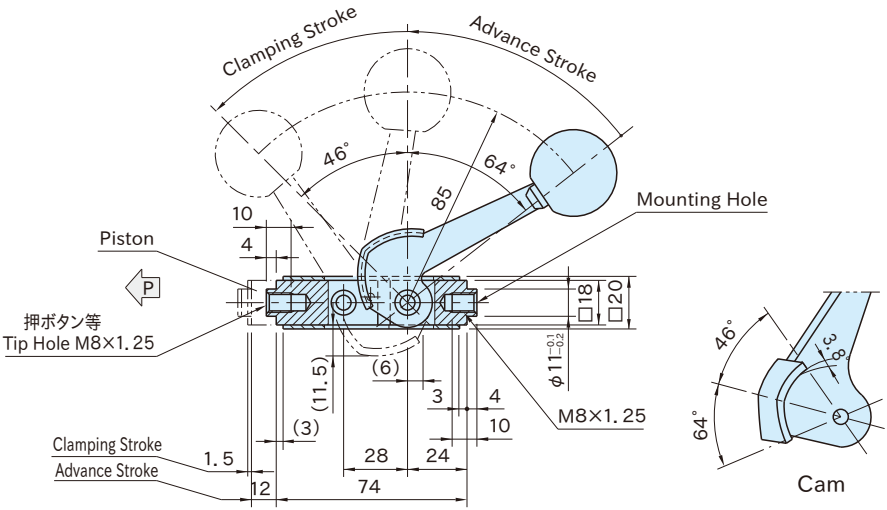

Part Number	Clamping Force(N)	Operating Load (N)	Weight (g)
ARN	4,905	530	250

Features

- Compact design
- Can be easily installed and removed.
- Perfect for simple fixture building.
- Max. clamping force : nearly 4,905N with the max load of 530N
- 3 different tips are available.

Notes

- Max. load applicable to the lever : 530N
- 3 different tips are available.

AR-1 **AR-2** **AR-3**