Handle lifting type

By operating the handle, you can move up and down the built-in freebears (or rollers) from the table surface.
The handle stopper is a standard accessory.

Freebear Table

RoHS CAD 3D

HFT-6

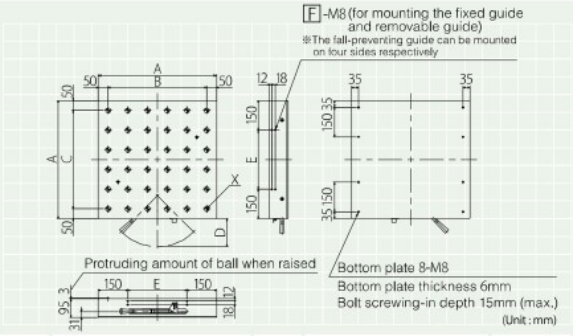

Model	Load capacity	A	B	C	D	E	F	X (Freebear)	Weight
HFT-6	500kg	600	100 Pitch × 5=500	100 Pitch × 5=500	145	300	16	C-8Y (Qty.: 36)	75kg
HFT-9	500kg	900	100 Pitch × 8=800	100 Pitch × 8=800	210	300 Pitch × 2=600	24	C-8Y (Qty.: 81)	150kg

Freebear Table

RoHS CAD 3D

HFT-600 × 900
Load capacity 500kg
Weight 105kg

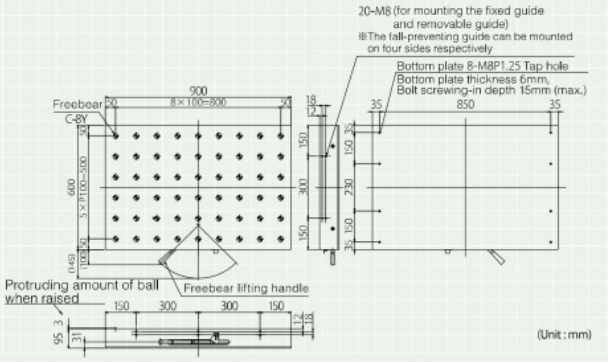

Roller Table

RoHS CAD 3D

HRT-6

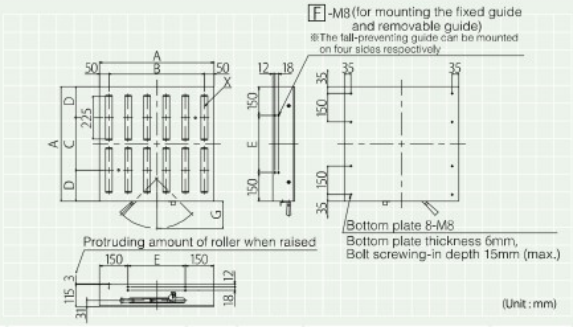

Model	Load capacity	A	B	C	D	E	F	G	X (Roller)	Weight
HRT-6	500kg	600	100 Pitch × 5=500	275	162.5	300	16	145	Ø 38 × 6 pcs. × 2 rows	80kg
HRT-9	500kg	900	100 Pitch × 8=800	275 Pitch × 2=550	175	300 Pitch × 2=600	24	210	Ø 38 × 9 pcs. × 3 rows	160kg

Products with the roller direction 90° changed are also available.

Handle lifting type for light load

A handle lifting type freebear table special for light load (100kg or less) is now available.By operating the handle, the built-in freebears move up and down from the table surface. So you can work safely even when it is attached to a lifting truck.

Freebear Table

RoHS CAD 3D

LHFT-450 × 700
Load capacity 100kg
Weight 26kg

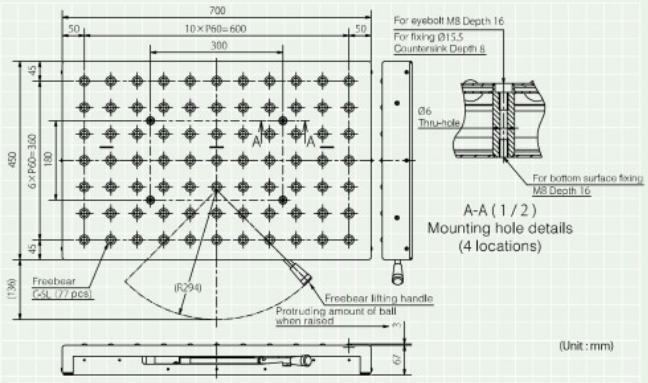

※Product specifications are subject to change without prior notice. Please contact us for details.